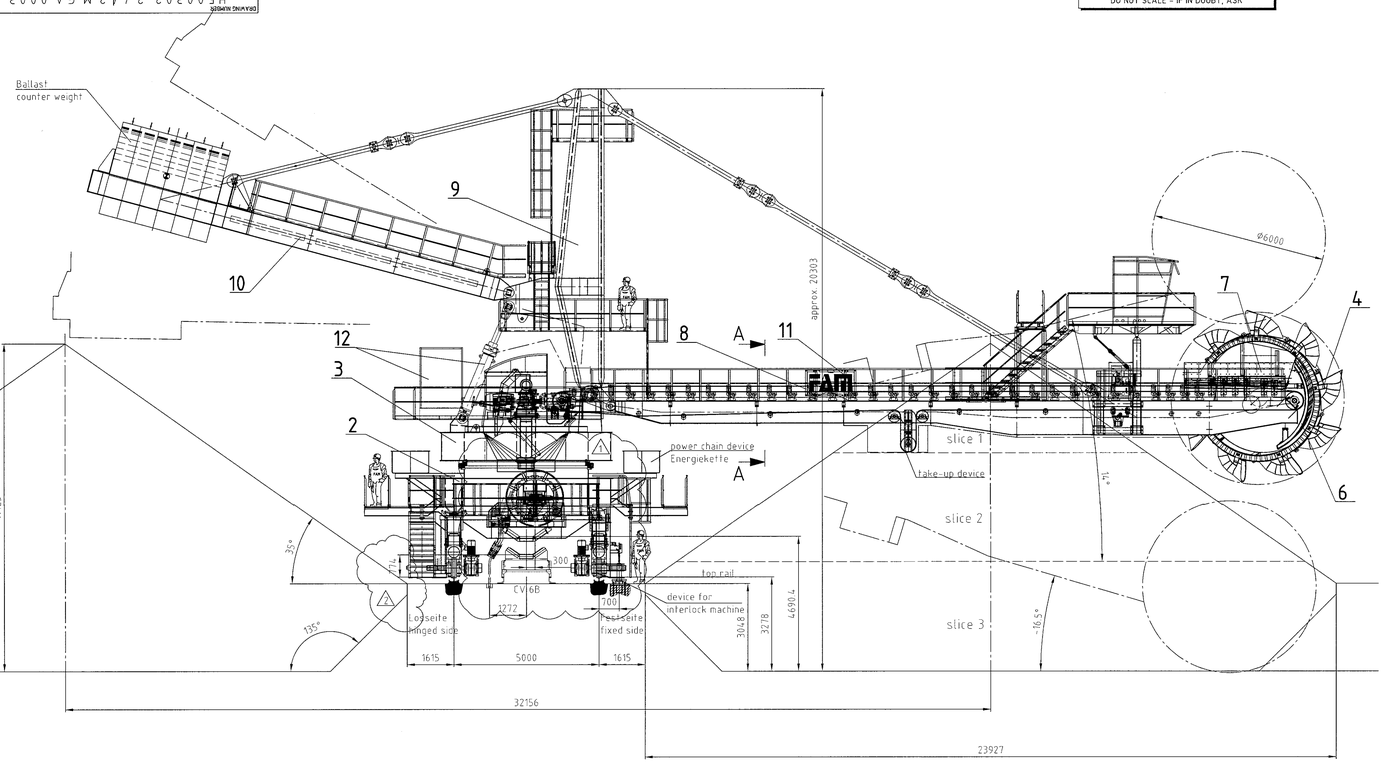
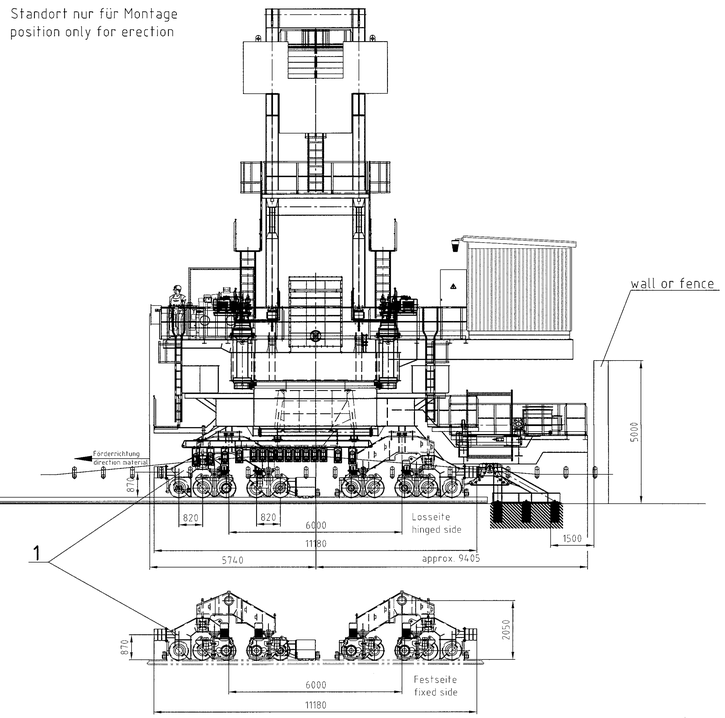
DRAWING NUMBER: H500302 2442M GA 0003 01

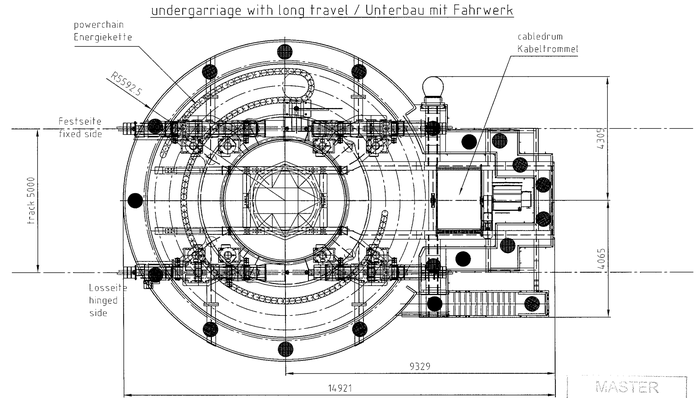
DO NOT SCALE - IF IN DOUBT, ASK



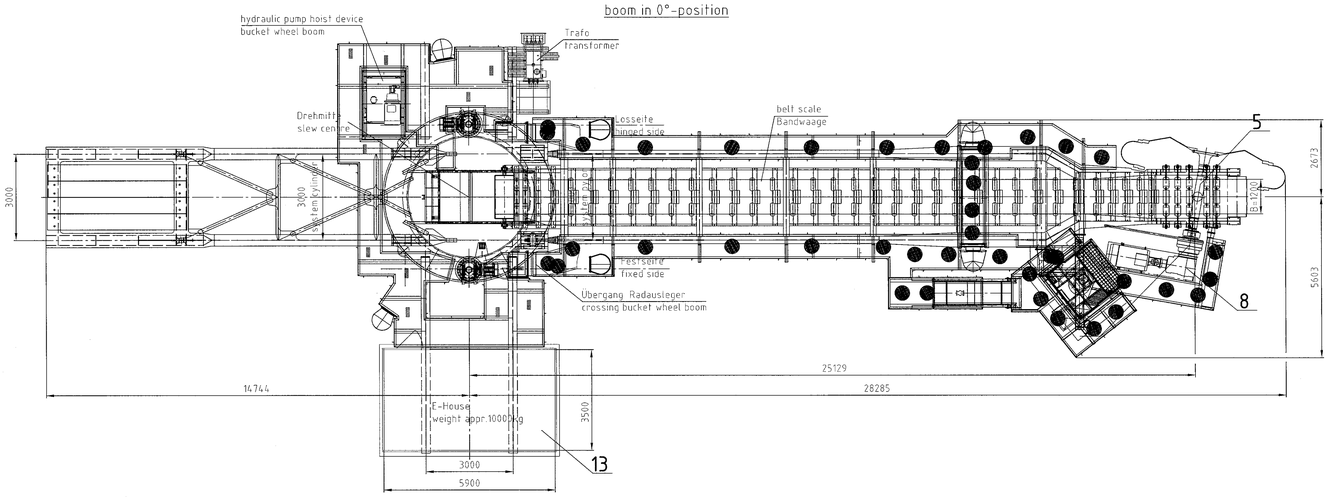
Standort nur für Montage
position only for erection



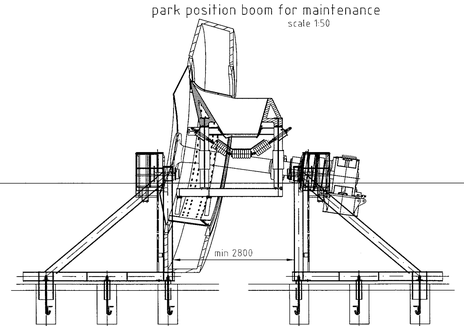
undergarriage with long travel / Unterbau mit Fahrwerk



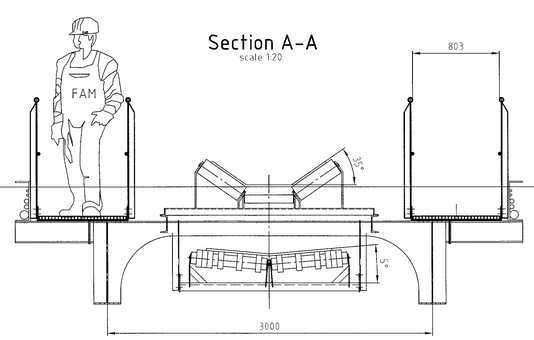
boom in 0°-position



park position boom for maintenance
scale 1:50



Section A-A
scale 1:20



CONTRACTOR REVIEW LABEL

Discipline	Name	Signature	Date	Statutory	Structural	Mechanical	Electrical	Process
	J. Charman		12/5/08	Y				
	F. Vincke		12/5/08	Y				

REVIEW CODE – ASSIGNED BY PROJECT MANAGER

C1	Accepted, Submit "AS BUILT"	C4	Review Not Required
C2	Accepted with Comments, Make Corrections noted	C5	Accepted ("SEE/DEV" Attached)
C3	Not Accepted, Review & Resubmit		Rejected ("Void" Attached)

Date: 12/5/08 PROJECT MANAGER
REVIEW CODE: C1 Signature:
Project and general compliance with the information given in the contract documents.

Name of Contractor's Authorised Person: Peter Clements (P. Clements)

NOTE! THIS DRG. TO BE READ IN CONJUNCTION WITH SHT.1 to 2

The copyright of this drawing remains with the Magdeburger Foerderanlagen und Baumaschinen GMBH/FAM. All rights reserved. No part of this drawing may be reproduced, disclosed to third parties, stored in information retrieval systems, or transmitted, in any form or by any means - electronic, mechanical, photocopying, recording or otherwise - without prior written permission of FAM. All rights reserved for all subjects, components, details and/or procedures/techniques shown and represented in this drawing, particularly also for granting of patents or registration of utility models as well as for any other proprietary rights. Infringements of such rights will result in assertions of injunctive

Part no.	Qty	Material	Drawing no.	Name of Part	size	Standard	Material	unit weight	total weight	remarks
13	1		57.01.08.04 - basic	E-Ausrüstungen Endschalter, Trafo, E-Haus, Kabel		ELB		22000	22000	Delivery ELB
				E-Equipments limit switches, Trafo, electr. house, cables						
12	1		57.01.08.02 - basic	Verlagerung hydraulik komplett		ELB		7000	7000	Delivery ELB
				support hydraulic complete						
11	1		57.01.08.01 - basic	Verlagerung Schalter		ELB		965	965	Delivery ELB
				support sens.						
10	1		57.01.07 - basic	Gegenausleger komplett mit Ballast		ELB		135000	135000	Delivery ELB
				counterweight boom complete with counterweight						
9	1		57.01.06 - basic	Mast komplett		ELB		23000	23000	Delivery ELB
				pylon complete						
8	1		57.01.05 - basic	Radausleger mit Baudistrolle inkl. Schaufelrad-Antrieb		ELB		44000	44000	Delivery ELB
				bucket wheel boom with conveyor incl. bucket wheel-drive						
7	1		0996847/57.01.04.04	Aufgabeturm Schaufelradkomplett		FAM / ELB		2345	2345	delivery FAM/ manufacture and delivery ELB
				transfer chute bucket wheel complete						
6	1		0996846/57.01.04.03	Leitschurre Schaufelrad komplett		FAM / ELB		1300	1300	delivery FAM/ manufacture and delivery ELB
				ring chute bucket wheel complete						
5	1		0996844/57.01.04.02	Lagerung Schaufelradwelle		FAM		2426	2426	delivery FAM, manufacture and delivery FAM
				support bucket wheel						
4	1		0996795/57.01.04.01	Schaufelrad mit Schaufeln Ela*		FAM		7701	7701	delivery FAM, manufacture and delivery FAM
				bucket wheel with sheets						
3	1		57.01.03 - basic	Oberbau komplett		ELB		44000	44000	Delivery ELB
				slew deck complete						
2	1		57.01.02 - basic	Unterbau komplett		ELB		35200	35200	Delivery ELB
				substructure complete						
1	1		0996368/57.01.01	Schienenfahrwerk		FAM		36350	36350	delivery ex works manufacture and delivery FAM
				long travel gear						

For general notes see Drg.No 1.00887 | total mass: 363 t

ENGINEERING SERVICES

Magdeburger Foerderanlagen und Baumaschinen GmbH

ELB–FAM DRG.No 57.011

NO.	DESCRIPTION	BY	CHK'D	APP'D	DATE
4	AS BUILT	P.M.	O.N.		26.04.2010
3	AS BUILT	P.M.	O.N.		28.09.2009
2	BELT WAS 1416mm TO TOP OF RAIL	K.VINCENT	O.N.		23.07.2009
1	CABLE REEL AND CONV MODELS UPDATED	K.VINCENT	O.N.		16.07.2009
0	ISSUED FOR CONSTRUCTION	G.Jurkovic	O.N.		02.02.2009

REVISIONS / ISSUE AUTHORIZATION

This Document including all designs and information therein is Confidential Intellectual Property of Transnet and/or RMG JV. Copyright and all other rights are reserved by transnet and/or RMG JV. This Document may only be used for its intended purpose.

	EPCM CONSULTANT:				ORIGINATOR:			
TITLE	NAME	SIGNATURE	DATE	TITLE	NAME	SIGNATURE	DATE
LEAD DES. ENG.	S.Cloete		5 5 10	DRAWN	Matthias	T.M	23 05 08
ENG. COORD.				CHECKED	KRIESCH	A.K	23 05 08
ENG. MANAGER			10 05 09	ENG. COORD	Ngubane	ON	10 06 09
PROJECT MGR.				DISCIP. ENG.	Kiesch	AK	10 06 09
DIVISION				ENG. MANAGER	Lawrence	GL	10 06 09
DIV.	TITLE	NAME	SIGNATURE	DATE	AREA MANAGER	Wilson	BW	10 06 09
					PR.ENG. / PR.TECH.			
					NAME	Pihs/Matthias		DATE
					SIGNATURE	TM/PE		10 06 09
					REG. NUMBER	FAM-Germany	2007/01523	

TRANSNET

ELB / TRANSNET

PE-MANGANESE TERMINAL RECLAIMER

FAM–PROJECT 110979
RECLAIMER–RE 3000.25
G.A.

MASTER 2010 -04- 30

DRAWING NO.	REFERENCE

REFERENCE DRAWINGS

SCALE : 1:75 | SIZE: A0 | PROJECT NUMBER: H500302-2442-M-GA-0003 | DIV: 01 | FBS: -4 | DIS: EL | TYPE: | ORG. NO.: | SHT.: | REV.: 01 | ID:

SIZE:A0 DATE: 2006/12/05